Forndlock

A-1204 Rod Control Swinghandle

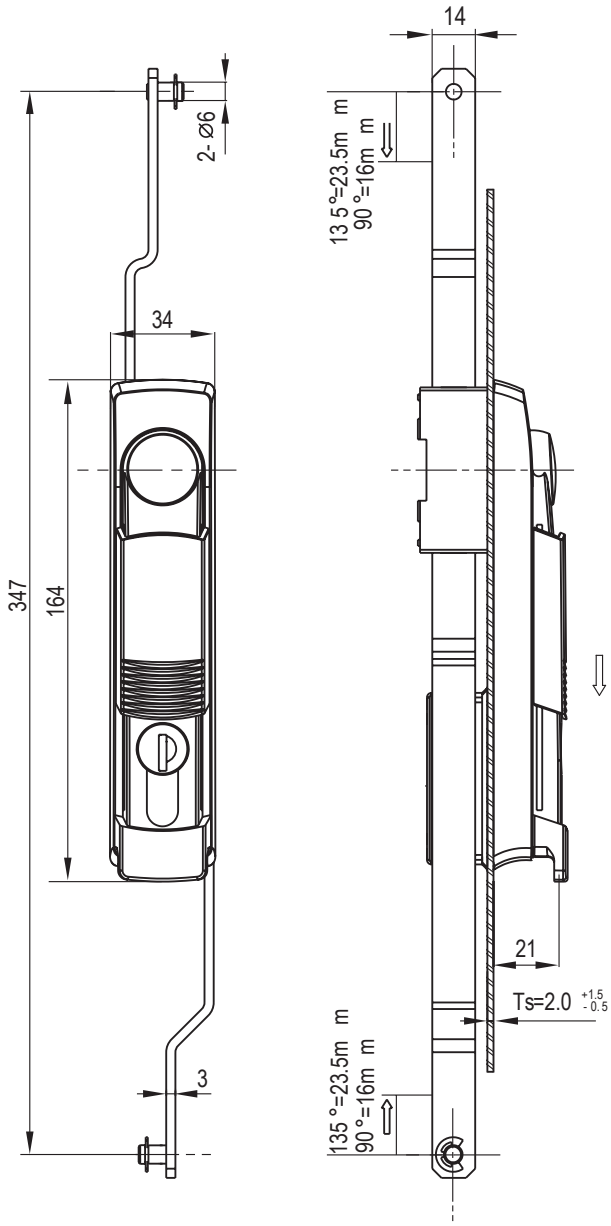

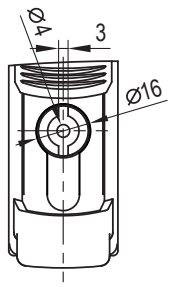

双翅 4mm
Double Bit 4mm

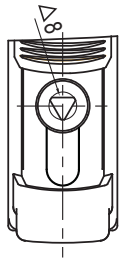

三角锁芯 8mm
Triangular 8m m

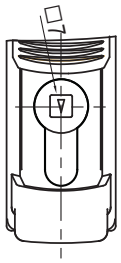

四方锁芯 7m m
Square 7mm

1.Material and surface treatment:
Lock body,handle:PA66+30%GF
Steel bolt: iron galvanized
Sealing ring: EPDM foam.

2. Performance parameters:
Protection class: IP65
Handle bearing tension value: ≤ 520N
Handle bearing torque value: ≤ 27N. m
Maximum static load: 270N

3. Remarks:
Optional dedicated key
CH751 key optional
Default K333 key

1.材质及表面处理:
锁体,手柄:PA66+30%GF
钢栓 : 铁镀锌
密封圈: EPDM发泡胶。

2.性能参数:
防护等级: IP65
手柄承载拉力值: ≤ 520N
手柄承载扭矩值: ≤ 27N.m
最大静载荷: 270N

3.备注:
专用钥匙可选
CH751 钥匙可选,
默认K333钥匙

锁芯 Cylinder style	Version B(两点拉杆型 2Prod control)	Version C(三点拉杆型 3Prod control)
	有防尘盖 With Dust Cap	无防尘盖 Without Dust Cap
半圆柱 K333 相同钥匙 Alike K333 ProPle Round Cylinder	A-1204-2P01-60	1A-1204-3P01-60
双翅 4mm (Double Bit 4mm)	A-1204-2P02-60	A-1204-3P02-60
四方锁芯 7mm (Square 7mm)	A-1204-2P03-60	A-1204-3P03-60
三角锁芯 8mm (Triangular 8mm)	A-1204-2P04-60	A-1204-3P04-60

如需获得产品3D模型图，请联系 WWW.FORNDLOCK.COM